HSF

NOTES:
Rated Current: 7.0A
Contact Resistance: 20mΩ max
Withstand Voltage: AC 1500V
Insulation Resistance: 1000MΩ/DC 500V
Operation Temperature: −20℃ to +85℃

Contact Material: Brass
Contact plating: Sn Over Ni
Insulator Material: PA66 UL94V−0

Ordering Information

WF4141 - 2 WS XX W 0 2

- No.of Row Double Row
- Straight Type
- No.of pins 03=2X03PIN 04=2X04PIN 05=2X05PIN
- Colour W=White
- Package 0=PE bag
- Wcon Internal Code

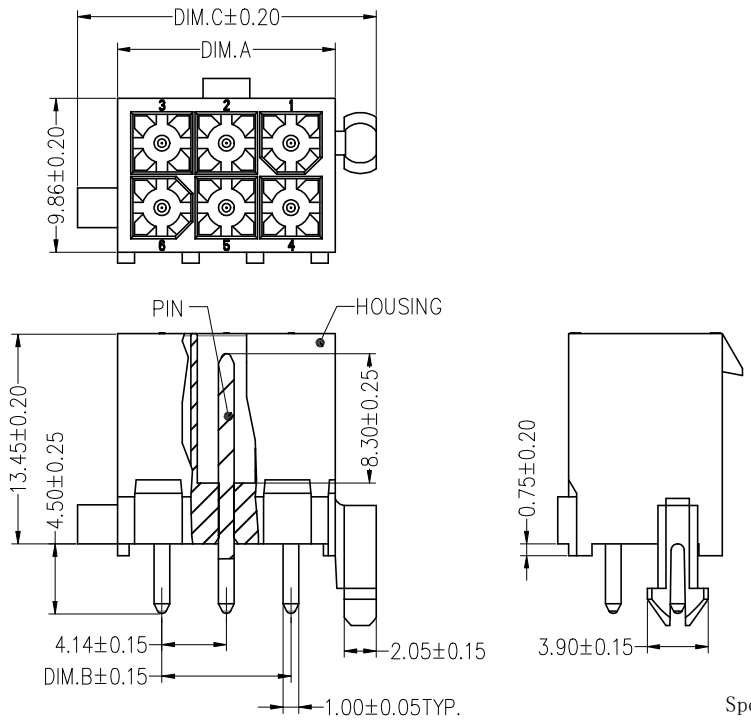

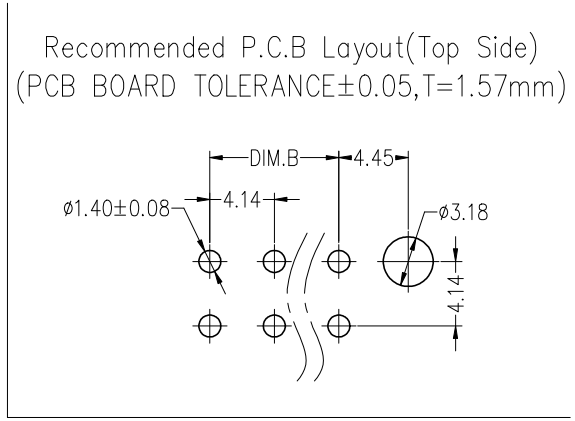

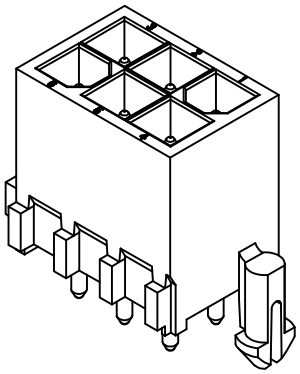

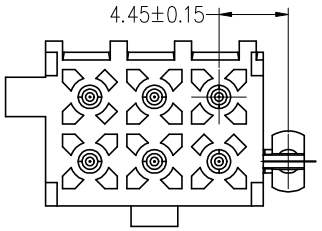

2X3PIN

Specification & Ordering Information:

Part No.	Circuit	DIM. A	DIM. B	DIM. C
WF4141-2WS02W02	2x02	9.83±0.20	4.14	15.01
WF4141-2WS03W02	2x03	13.97±0.20	8.28	19.15
WF4141-2WS04W02	2x04	18.11±0.20	12.42	23.29
WF4141-2WS05W02	2x05	22.25±0.20	16.56	27.43
WF4141-2WS06W02	2x06	26.39±0.20	20.70	31.57
WF4141-2WS07W02	2x07	30.53±0.25	24.84	35.79
WF4141-2WS08W02	2x08	34.67±0.25	28.98	39.93
WF4141-2WS09W02	2x09	38.81±0.30	33.12	44.07
WF4141-2WS10W02	2x10	42.95±0.30	37.26	48.21
WF4141-2WS11W02	2x11	47.09±0.40	41.40	52.35
WF4141-2WS12W02	2x12	51.23±0.40	45.54	56.49

REV	DATE	MODIFICATION DESCRIPTION	CHANGE
A0	2022/11/18	NEW	---

OPERATION	
X.X	±0.30
X.XX	±0.25
X.XXX	±0.15
Angle	±3°
DIM	TOL

DRAW Morris	DATE 2022/11/18	SCALE	FIT
CHECK	DATE	UNIT	mm
APPROVE	DATE	SIZE	A4
		SHEET	1/2
		PROJ.	

PART NO. WF4141−2WSXXW02

TITLE: **4.14mm Wafer,** "T" Type, Double Row, **S/T, W/T Post**

Customer NO.

WCON
Http: www.wcon.com
WCON−Dongguan
Tel: +86 769 85358920
Fax: +86 769 85358915
E-mail: sales@wcon.com
WCON−Kunshan
Tel: +86 512 57468408
Fax: +86 512 57468468
E-mail: salesks@wcon.com